Marketing Drawing for 193

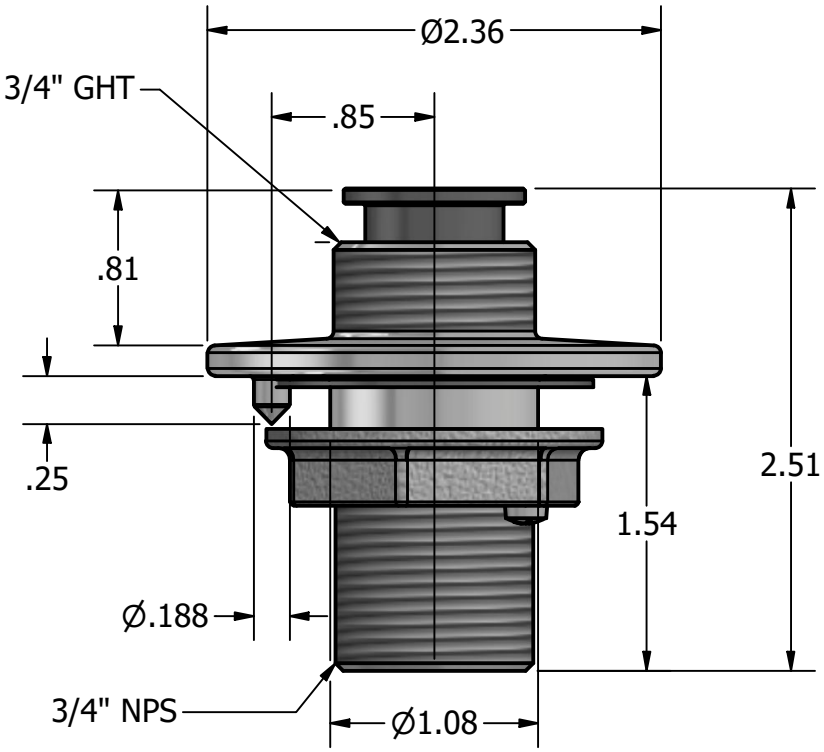

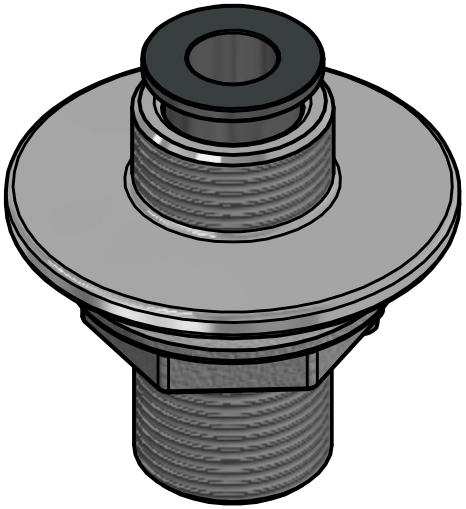

NOTES:
1. RECOMMENDED HOLE SAW Ø28mm OR Ø1-1/8in
2. USE THREAD SEALANT ON MATING FEMALE FITTING TO MITIGATE LEAKS
3. BED IN BOTTOM SURFACE AND NUT TO MITIGATE CORROSION

GEMLUX

Description
Water Outlet with Automatic Valve, 3/4" NPS, 3/4" GHT

Size	Part No	Units	Rev	Scale
A	193	INCHES	0	1 : 1

Phone: 800.874.4506 | www.gemlux.com